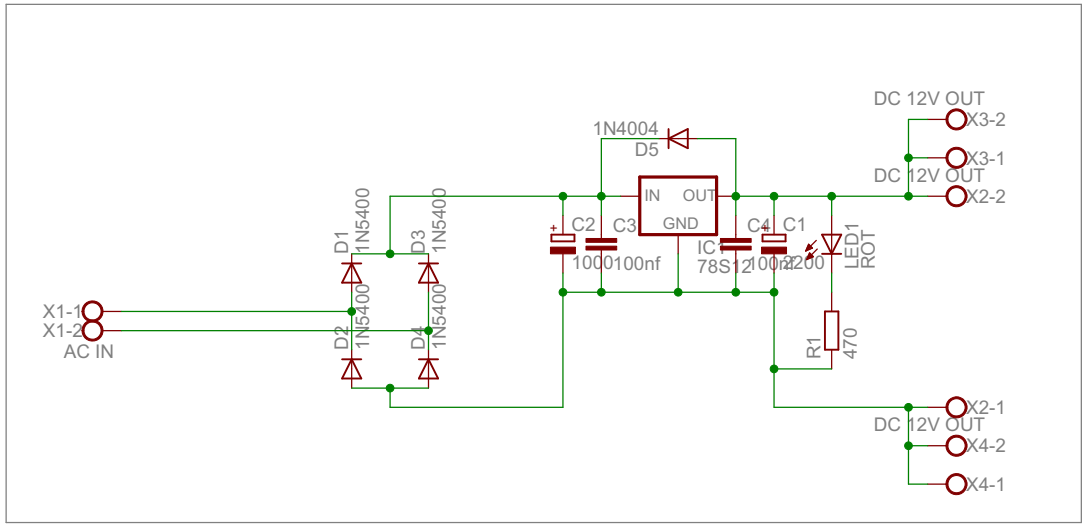
DC 12V OUT
X3-2
X3-1
DC 12V OUT
X2-2
1N4004
D5
IN
OUT
GND
IC
78S12
C2
C3
1000
100nf
C4
C1
100nf
2200
LED1
ROT
R1
470
D1
1N5400
D2
1N5400
D3
1N5400
D4
1N5400
X1-1
X1-2
AC IN
X2-1
DC 12V OUT
X4-2
X4-1